# Pronto 2

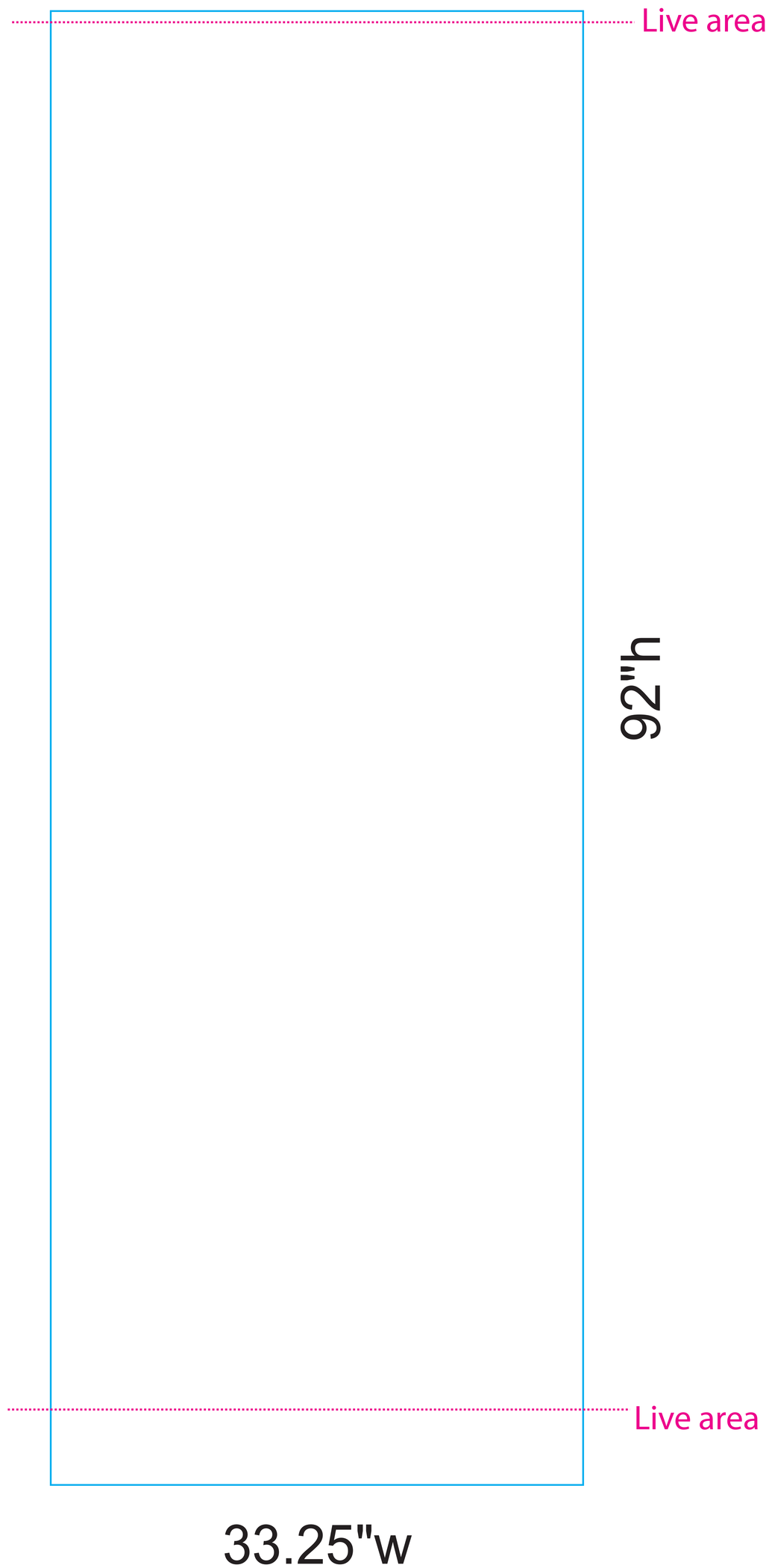


Final size: 33.25”w x 92”h
Live area: 87.25” from the top
*Please note that .625” will be covered at the top by a hanger bar.

# Pronto 2

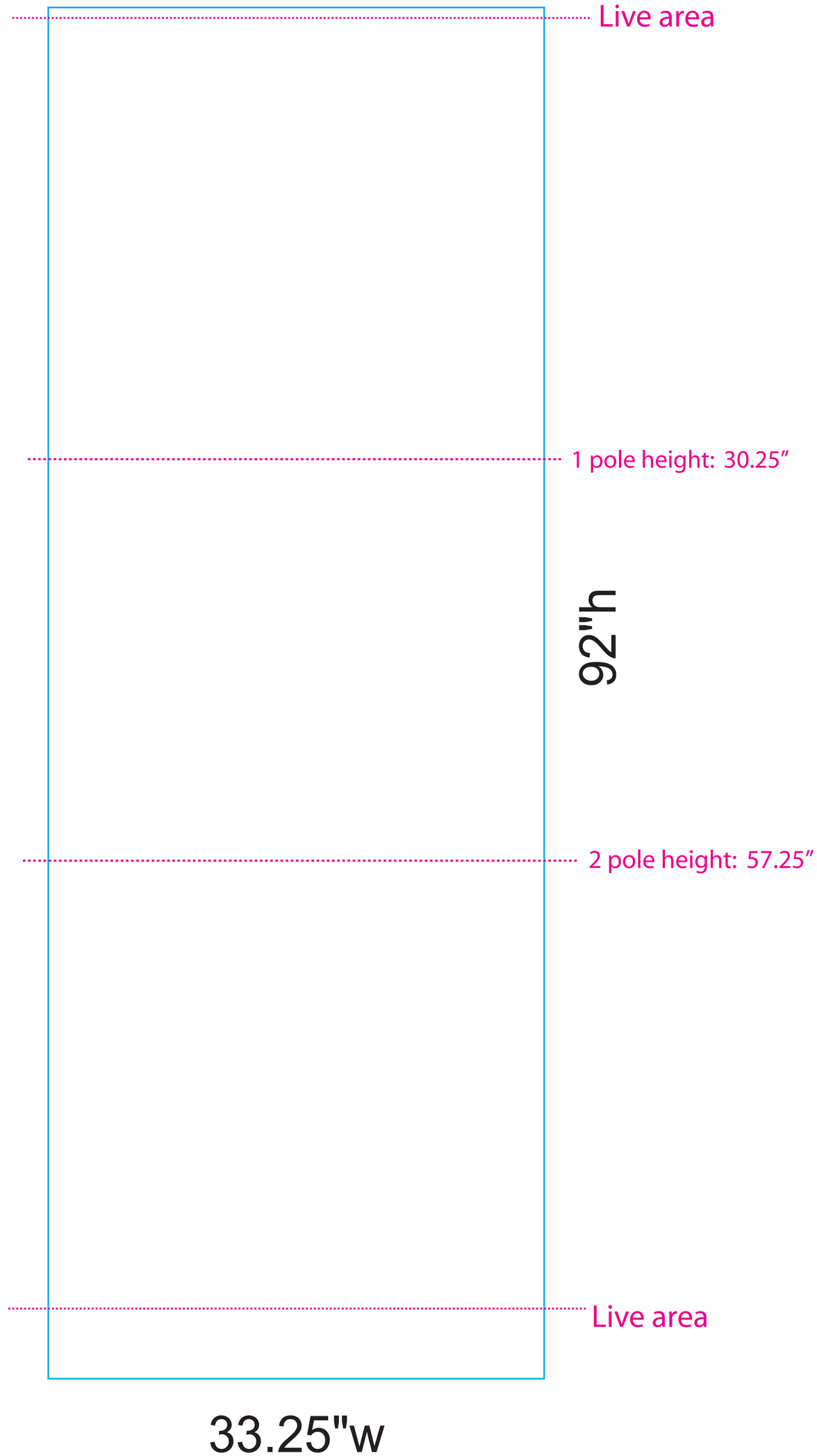


Final size: 33.25”w x 92”h
Live area: 87.25” from the top
*Please note that .625” will be covered at the top by a hanger bar.